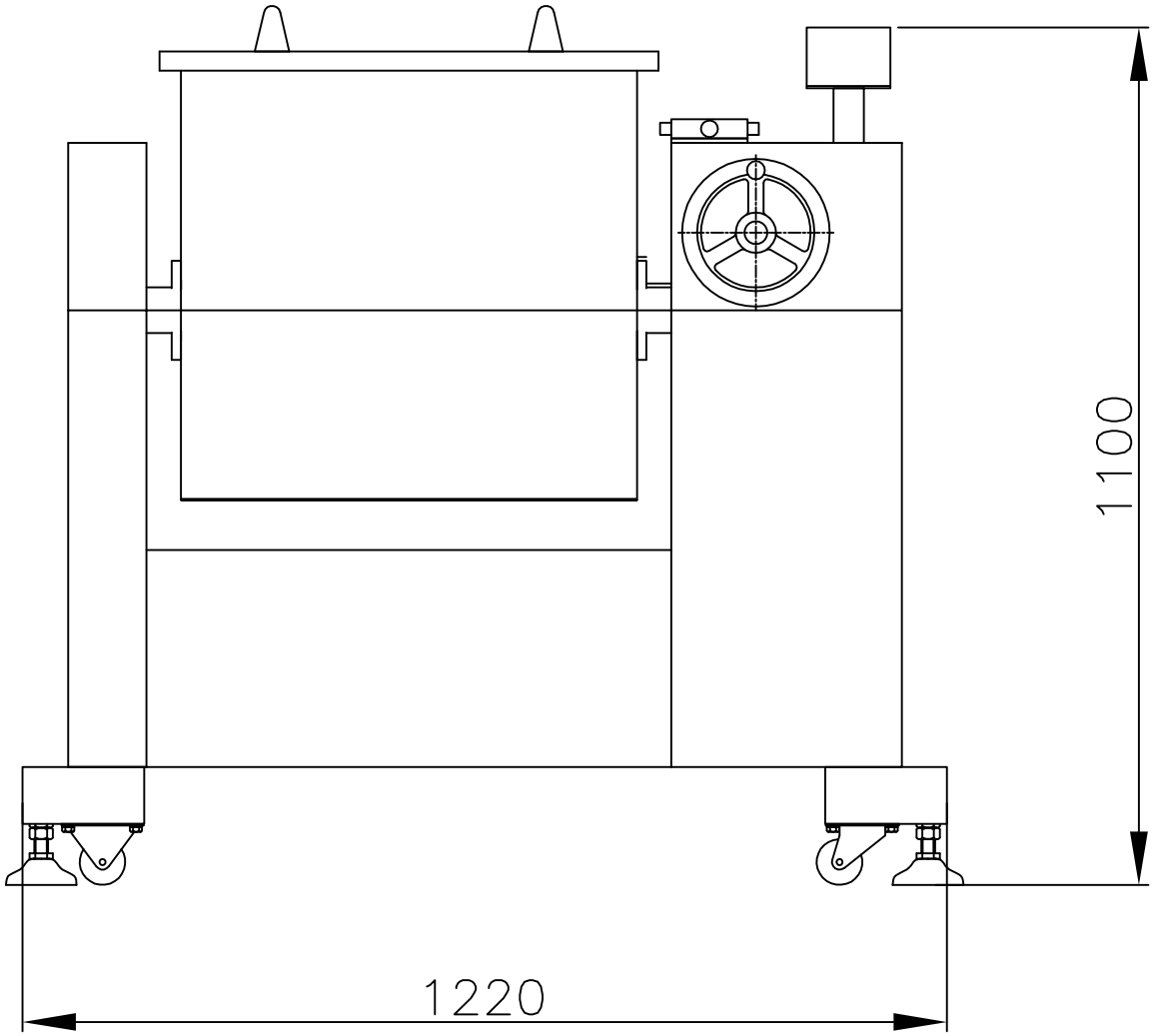

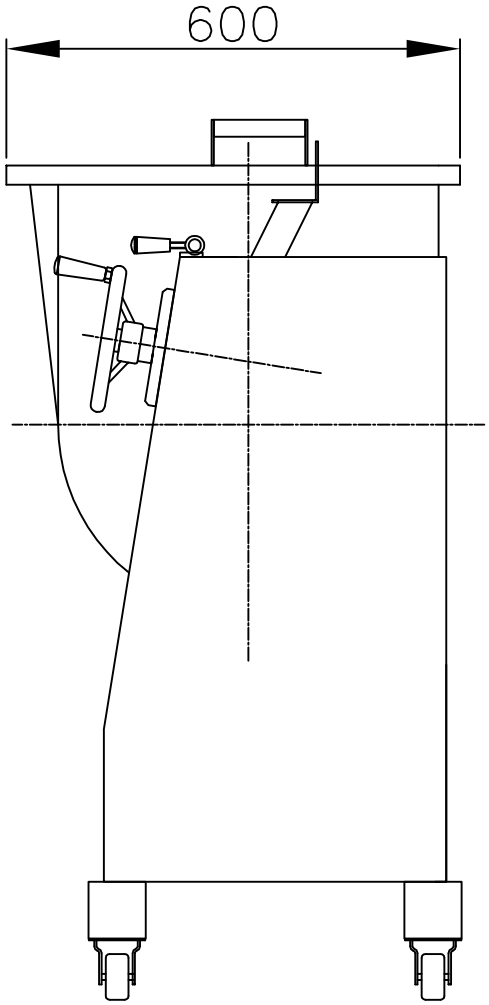

SCALE A0x2.5 1/1	DESIGNED	DRAWN	CHECKED	APPROVED	TITLE	혼합기 100L
3 RD		JE. SEO 2007.05.02			ASS'Y	전체 조립도
SL COMPANY					DWG NO	SFM-100LA-ASSY